2026 | LG | THERMA V™

R290 MONOBLOC S

BROWSE NOW

For more **LG THERMA V information**, please visit our website through QR code.



LG

www.lg.com | http://partner.lge.com | Copyright © 2026 LG Electronics. All rights reserved.

- The images in this catalogue are scenes created to help customers' understand and may differ from the actual product.
- The specifications or product appearance may be subject to change without prior notice to improve the appearance and product performance.

LG



THE SUSTAINABLE CHOICE

Today's informed consumers evaluate multiple factors when selecting a heating solution such as an Air-to-Water Heat Pump (AWHP), including user-friendliness, reliability, and compliance with the latest regulations. As European heating regulations continue to evolve year after year, they are becoming an increasingly important consideration for homeowners.

With refrigerant regulations tightening worldwide, the shift toward more sustainable, eco-conscious solutions is accelerating.

The THERMA V Monobloc S adopts natural R290 refrigerant, which has an exceptionally low CO_2-equivalent index compared to gases such as R32. As a result, potential carbon emissions from refrigerants are reduced by up to 99.7% compared to the previous R32 Monobloc S and S II models. Because R290 is a natural refrigerant with near-zero carbon impact, it can be released directly into the atmosphere without harming the climate.

THERMA V™

FORM MEETS FUNCTION:

THERMA V IN DARK MONOTONE

The outdoor units incorporate a refined monotone chassis design engineered for improved structural rigidity and corrosion resistance. The uniform exterior finish minimizes visual noise and ensures consistent integration with a broad range of architectural materials and façade systems, including metal cladding, composite panels, and modern masonry.

The updated enclosure design supports optimized airflow management and service accessibility, contributing to enhanced installation efficiency in various mounting configurations.

Developed with European environmental and urban-planning considerations in mind, the design reduces reflective surface impact, aligns with noise-sensitive installation standards, and supports seamless deployment across diverse residential and commercial building environments.

SIMPLER INSTALLATION |
BETTER DESIGN
MORE COMFORTABLE LIVING |

THERMA V™ R290 Monobloc S



LG R290 Monobloc S

The Monobloc S is LG's latest full monobloc heat pump series,
featuring R290 refrigerant and a sleek, modern European dark monotone design.

What is R290 Monobloc S?

The THERMA V Monobloc S is LG's latest monobloc heat pump featuring the low-GWP R290 refrigerant with a global warming potential of just 0.02. It retains the same sleek exterior design as the existing R32 Monobloc S II and is equipped with the LG Deluxe Remote Controller with embedded Wi-Fi for convenient system control. The Monobloc S lineup also offers three-phase 7 kW and 9 kW models, providing more flexible installation options for various site environments.

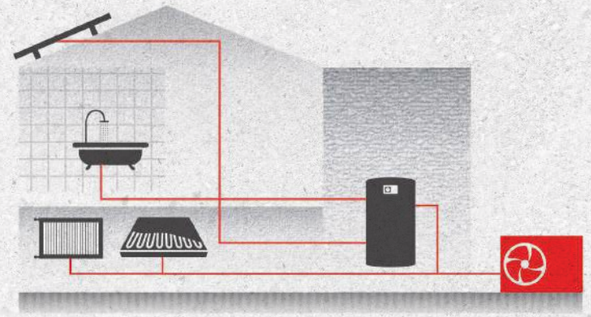

Key Features

- Capacity range from 5 to 16 kW for new build and renovation
- Dark monotone that adapts to various surroundings
- Standalone heat pump allowing easy installation (Plug and Play solution)
- ErP Energy Labeling A+++ / A++ for space heating (Average Climate 35℃ / 55℃ LWT)
- Maximum flow temperature up to 75℃
- Operation range down to -25℃
- Compact and lightweight

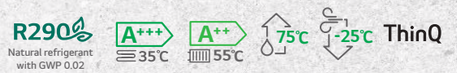

Product Range

Phase	Capacity (kW)	Outdoor Unit
1Ø	5	HM051HFS UA41
	7	HM071HFS UA41
	9	HM091HFS UA41
	12	HM121HFS UB41
	14	HM141HFS UB41
	16	HM161HFS UB41
3Ø	7	HM073HFS UA41
	9	HM093HFS UA41
	12	HM123HFS UB41
	14	HM143HFS UB41
	16	HM163HFS UB41

HIGHLIGHT OF R290 MONOBLOC S

Sleek Design

European Dark Monotone

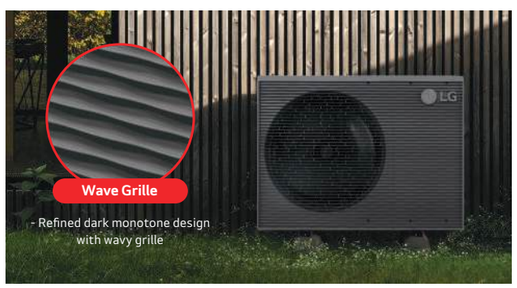

Enhanced Convenience



- Outdoor unit design meets European standards
- Refined dark monotone design that will look great anywhere
- 2 feet instead of 3 feet which was uncomfortable

More Intuitive Interface



Standard III
Remote Controller

Deluxe
Remote Controller

- 4.3" Display
- Full Color
- Full Touch
- Wi-Fi modem (Embedded)

Space Efficiency

Simpler Exterior

- Integrated hydronic components in the package
- Easier and quicker installation without refrigerant piping work
- The best solution, when interior space is limited



Comfortable Ease

Low Noise Level Allowing Installation Flexibility

- Designed to reach lower noise levels in order to meet homeowner expectations in urban areas
- Noise reduction technology such as encapsulated compressor and vibration-decoupling to ensure a quieter and more comfortable experience



Reliable Performance

Remarkable Heating Performance even in Cold Weather

- 100% heating capacity at -15°C ambient temp. (except 14, 16 kW models)
- Longer continuous heating periods with reduced defrost operation time and extended intervals



Convenience

Easy Maintenance

Easy access to PCB for installing and maintenance

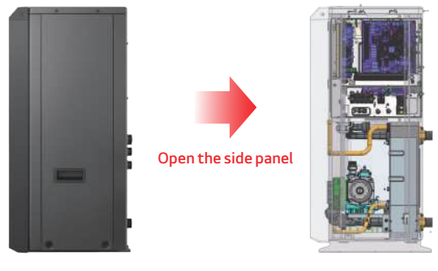

Separate Supply of Strainer

Easy strainer cleaning by not opening the panel



Integrated strainer

Loose supplied item
(Supplied with outdoor unit)

THERMA V
R290 MONOBLOC S (5 / 7 / 9 kW)

Outdoor Unit

HM051HFS UA41
HM071HFS UA41 / HM073HFS UA41
HM091HFS UA41 / HM093HFS UA41





011-1W1195

R290 Natural refrigerant with GWP 0.02 | A+++ 35℃ | A++ 55℃ | 75℃ | -25℃ | ThinQ

Key Components

Outdoor Unit

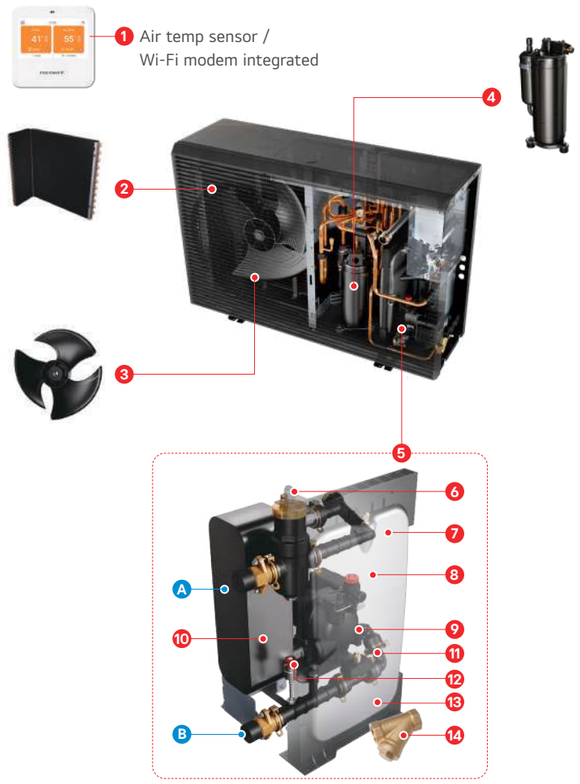

Components

1. Deluxe remote controller[1) 2)]
2. Black Fin heat exchanger (air / ref.)
3. Biomimetic fan
4. Twin rotary compressor
5. Hydronic components assembly
6. Deaerator
7. Expansion tank (8 ℓ)
8. Safety valve
9. Air vent valve
10. Plate heat exchanger
11. Water pump
12. Pressure sensor
13. Flow sensor
14. Strainer (loose supplied)

1) The remote controller is supplied with the product, but it needs to be installed separately.
2) Temperature control class (ErP class): V
* Picture shows the 5, 7, and 9 kW models. (UN36A)

Connections

A. Leaving water pipe (male PT 1")
B. Entering water pipe (male PT 1")

Product Specification

Efficiency Data		Unit	5 kW (1 Ø)	7 kW (1 Ø) 7 kW (3 Ø)	9 kW (1 Ø) 9 kW (3 Ø)
Seasonal space heating eff. class (35°C / 55°C)		-	A+++ / A++	A+++ / A++	A+++ / A++
Seasonal space heating efficiency (η_s) (35°C / 55°C)		%	180 / 140	187 / 141	185 / 143
SCOP (35°C / 55°C)		-	4.58 / 3.58	4.75 / 3.60	4.70 / 3.66
Sound power level	Rated / low noise mode	dB(A)	53 / 52	54 / 53	56 / 55
Sound pressure level at 5 m	Rated / low noise mode	dB(A)	31	32	34
Nominal Capacity and COP / EER					
Air +7°C / water +35°C	Heating capacity / COP	kW / -	5.50 / 4.90	7.00 / 4.70	9.00 / 4.60
Air +2°C / water +35°C	Heating capacity / COP	kW / -	5.50 / 3.20	6.50 / 3.15	7.00 / 3.10
Air -7°C / water +35°C	Heating capacity / COP	kW / -	5.50 / 2.85	7.00 / 2.05	9.00 / 2.00
Air +7°C / water +55°C	Heating capacity / COP	kW / -	5.50 / 2.95	7.00 / 2.85	8.00 / 2.80
Air -7°C / water +55°C	Heating capacity / COP	kW / -	5.50 / 1.90	7.00 / 1.85	8.00 / 1.80
Air +35°C / water +18°C	Cooling capacity / EER	kW / -	5.50 / 4.90	7.00 / 4.70	8.00 / 4.50
Air +35°C / water +7°C	Cooling capacity / EER	kW / -	5.50 / 3.00	7.00 / 2.90	8.00 / 2.85
Outdoor Units		**Unit**	**HM051HFS UA41**	**HM071HFS UA41 HM073HFS UA41**	**HM091HFS UA41 HM093HFS UA41**
Operation range (outdoor air temperature)	Heating & DHW (Min. ~ Max.)	°C	-25 ~ 35		
	Cooling (Min. ~ Max.)	°C	5 ~ 48		
Operation range (leaving water temperature)	Heating (Min. ~ Max.)	°C	15 ~ 75		
	Cooling (Min. ~ Max.)	°C	5 ~ 27		
	DHW (Min. ~ Max.)	°C	15 ~ 80		
Refrigerant	Type	-	R290		
	GWP	-	0.02		
	Precharged amount	g	700		
Piping connections (water)	Inlet / outlet diameter	inch	Male PT 1" according to ISO 7-1 (tapered pipe threads)		
Expansion vessel (heating circuit)	Volume	ℓ	8		
Dimension	H x W x D	mm	853 x 1,242 x 391		
Weight	Net	kg	1 Ø: 102 / 3 Ø: 103.5		
Exterior	Color of chassis / RAL code	-	Black STS silver solid / RAL 8019		
	Color of front grille / RAL code	-	Light graphite / RAL 8022		
Power supply	Voltage, phase, frequency	V, Ø, Hz	220 ~ 240, 1, 50	220 ~ 240, 1, 50 / 380 ~ 415, 3, 50	
	Standby power consumption	W	10		
	Recommended circuit breaker	A	20	1 Ø: 25 / 3 Ø: 16	

Note
1. Due to our policy of innovation, some specifications may be changed without notification.
2. Wiring cable size must comply with the applicable local and national codes. Especially the power cable and circuit breaker should be selected in accordance with that.
3. Sound power level is measured on the rated condition in accordance with ISO 9614 standard. Sound pressure level is not a value declared on Eurovent Program and is converted from sound power level based on a tonality penalty of 0 dB and installation in free-field. The directivity index (Q) is assumed as 2. Therefore, these values can be increased owing to ambient conditions during operation. Rated sound power level is in accordance with EN12102-1 under condition of EN14825.
4. Performances are in accordance with EN14511 and reflect ErP testing conditions. Above gives the declared values at rated conditions according to ErP regulation.
5. This product contains fluorinated greenhouse gases.
6. All installation sites must be equipped with an earth leakage circuit breaker (ELCB).
7. DHW 65 ~ 80°C operating is available only when the booster heater is operating.

THERMA V
R290 MONOBLOC S (5 / 7 / 9 kW)

Performance Table for Heating Operation

Maximum heating capacity (including defrost effect)

HM051HFS UA41

Outdoor Temp. [°C DB]	LWT 30°C	LWT 35°C	LWT 40°C	LWT 45°C	LWT 50°C	LWT 55°C	LWT 60°C	LWT 65°C	LWT 70°C	LWT 75°C
	Capacity (kW)									
-25	4.98	4.85	4.72	4.59	4.47	4.34	4.21	-	-	-
-20	5.50	5.29	5.09	4.90	4.69	4.45	4.11	3.66	-	-
-15	5.50	5.50	5.50	5.21	4.94	4.83	4.29	3.89	3.49	3.10
-7	5.50	5.50	5.50	5.50	5.50	5.50	4.68	4.23	3.77	3.31
-4	5.50	5.50	5.50	5.50	5.50	5.50	4.85	4.36	3.88	3.39
-2	5.50	5.50	5.50	5.50	5.50	5.50	4.97	4.45	3.95	3.44
2	5.50	5.50	5.50	5.50	5.50	5.50	5.19	4.63	4.08	3.55
7	5.50	5.50	5.50	5.50	5.50	5.50	5.50	4.83	4.25	3.68
10	5.50	5.50	5.50	5.50	5.50	5.50	5.50	4.95	4.35	3.76
15	5.50	5.50	5.50	5.50	5.50	5.50	5.50	5.15	4.52	3.89
18	5.50	5.50	5.50	5.50	5.50	5.50	5.50	5.27	4.62	3.92
20	5.50	5.50	5.50	5.50	5.50	5.50	5.50	5.35	4.69	3.96
35	5.50	5.50	5.50	5.50	5.50	5.50	5.50	5.50	5.20	4.00

HM071HFS UA41 / HM073HFS UA41

Outdoor Temp. [°C DB]	LWT 30°C	LWT 35°C	LWT 40°C	LWT 45°C	LWT 50°C	LWT 55°C	LWT 60°C	LWT 65°C	LWT 70°C	LWT 75°C
	Capacity (kW)									
-25	6.34	6.17	6.01	5.85	5.68	5.42	5.36	-	-	-
-20	7.00	6.73	6.48	6.23	5.97	5.86	5.23	4.65	-	-
-15	7.00	7.00	7.00	6.63	6.29	6.12	5.36	4.85	4.44	3.95
-7	7.00	7.00	7.00	7.00	7.00	7.00	5.95	5.38	4.80	4.21
-4	7.00	7.00	7.00	7.00	7.00	7.00	6.17	5.55	4.93	4.31
-2	7.00	7.00	7.00	7.00	7.00	7.00	6.32	5.67	5.02	4.38
2	7.00	7.00	7.00	7.00	7.00	7.00	6.61	5.89	5.20	4.51
7	7.00	7.00	7.00	7.00	7.00	7.00	7.00	6.15	5.41	4.68
10	7.00	7.00	7.00	7.00	7.00	7.00	7.00	6.30	5.54	4.78
15	7.00	7.00	7.00	7.00	7.00	7.00	7.00	6.55	5.75	4.95
18	7.00	7.00	7.00	7.00	7.00	7.00	7.00	6.71	5.88	5.05
20	7.00	7.00	7.00	7.00	7.00	7.00	7.00	6.81	4.96	5.11
35	7.00	7.00	7.00	7.00	7.00	7.00	7.00	7.00	6.62	5.20

HM091HFS UA41 / HM093HFS UA41

Outdoor Temp. [°C DB]	LWT 30°C	LWT 35°C	LWT 40°C	LWT 45°C	LWT 50°C	LWT 55°C	LWT 60°C	LWT 65°C	LWT 70°C	LWT 75°C
	Capacity (kW)									
-25	6.65	6.92	6.89	6.86	6.82	6.79	6.47	-	-	-
-20	8.09	7.74	7.51	7.32	7.16	6.98	6.72	6.35	-	-
-15	9.00	8.45	8.08	7.77	7.50	7.35	6.93	6.60	6.26	5.69
-7	9.00	9.00	8.80	8.38	8.05	8.00	7.34	6.95	6.54	5.72
-4	9.00	9.00	8.87	8.56	8.25	8.00	7.52	7.09	6.65	5.75
-2	8.20	8.30	8.30	8.20	8.10	8.00	7.64	7.19	6.72	5.80
2	8.00	8.00	8.10	8.10	8.10	8.00	7.90	7.38	6.86	5.83
7	9.00	9.00	9.00	9.00	9.00	9.00	8.24	7.63	7.04	5.85
10	9.00	9.00	9.00	9.00	9.00	9.00	8.39	7.77	7.15	5.90
15	9.00	9.00	9.00	9.00	9.00	9.00	8.64	7.99	7.33	6.06
18	9.00	9.00	9.00	9.00	9.00	9.00	8.81	8.13	7.43	6.22
20	9.00	9.00	9.00	9.00	9.00	9.00	8.93	8.23	7.50	6.30
35	9.00	9.00	9.00	9.00	9.00	9.00	9.00	9.00	8.07	6.35

Note
1. DB: Dry Bulb Temperature (°C), LWT: Leaving Water Temperature (°C),
   LPM: Liters Per Minute (ℓ/min), TC: Total Capacity (kW)
2. Direct interpolation is permissible. Do not extrapolate.
3. Measuring procedure follows EN-14511.
   • Rated values are based on standard conditions and it can be found on specifications.
   • Above table values may not be matched according to installation condition. Except for rated value, the performance is not guaranteed.
   • In accordance with the test standard (or nations), the rating will vary slightly.
4. The shaded areas are not guaranteed continuous operation.

Performance Table for Cooling Operation

Maximum cooling capacity

HM051HFS UA41

Outdoor Temp. [°C DB]	LWT 7°C	LWT 10°C	LWT 13°C	LWT 15°C	LWT 18°C	LWT 20°C	LWT 22°C
	Capacity (kW)						
20	5.50	5.50	5.50	5.50	5.50	5.50	5.50
30	5.50	5.50	5.50	5.50	5.50	5.50	5.50
35	5.50	5.50	5.50	5.50	5.50	5.50	5.50
40	4.91	5.50	5.50	5.50	5.50	5.50	5.50
45	4.67	5.05	5.50	5.50	5.50	5.50	5.50

HM071HFS UA41 / HM073HFS UA41

Outdoor Temp. [°C DB]	LWT 7°C	LWT 10°C	LWT 13°C	LWT 15°C	LWT 18°C	LWT 20°C	LWT 22°C
	Capacity (kW)						
20	7.00	7.00	7.00	7.00	7.00	7.00	7.00
30	7.00	7.00	7.00	7.00	7.00	7.00	7.00
35	7.00	7.00	7.00	7.00	7.00	7.00	7.00
40	6.25	7.00	7.00	7.00	7.00	7.00	7.00
45	5.94	6.42	7.00	7.00	7.00	7.00	7.00

HM091HFS UA41 / HM093HFS UA41

Outdoor Temp. [°C DB]	LWT 7°C	LWT 10°C	LWT 13°C	LWT 15°C	LWT 18°C	LWT 20°C	LWT 22°C
	Capacity (kW)						
20	9.00	9.00	9.00	9.00	9.00	9.00	9.00
30	9.00	8.00	9.00	9.00	9.00	9.00	9.00
35	8.00	8.89	9.00	9.00	9.00	9.00	9.00
40	8.00	8.26	8.52	8.69	9.00	9.00	9.00
45	7.54	7.63	7.73	7.80	7.90	7.96	8.03

Note
1. DB: Dry Bulb Temperature (°C), LWT: Leaving Water Temperature (°C),
   LPM: Liters Per Minute (ℓ/min), TC: Total Capacity (kW)
2. Direct interpolation is permissible. Do not extrapolate.
3. Measuring procedure follows EN-14511.
   • Rated values are based on standard conditions and it can be found on specifications.
   • Above table values may not be matched according to installation condition. Except for rated value, the performance is not guaranteed.
   • In accordance with the test standard (or nations), the rating will vary slightly.
4. The shaded areas are not guaranteed continuous operation.

Supplied Parts

Strainer



Technical Specification		Unit	Details
Material	Body	-	Brass
	Mesh	-	Stainless steel (STS304)
Mesh	Mesh no.	-	30
	Max. particle size	mm	0.6
Piping connection		-	Female G1" according to ISO 228-1

* The strainer and valves are supplied with the product, but it need to be installed separately.
* This strainer should be installed at the inlet connection of the outdoor unit to protect the clogging of a plate heat exchanger.

THERMA V
R290 MONOBLOC S (5 / 7 / 9 kW)

Drawings

[Unit: mm]

HM051HFS UA41
HM071HFS UA41 / HM073HFS UA41
HM091HFS UA41 / HM093HFS UA41

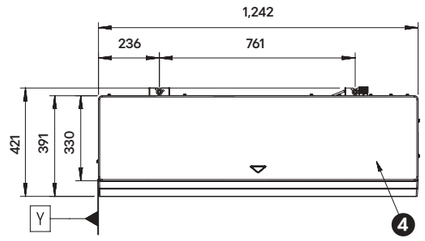

Top view

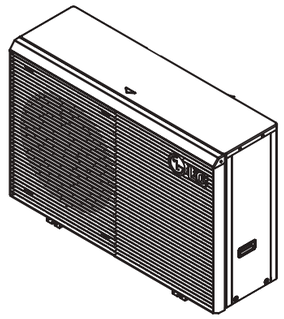

3D view

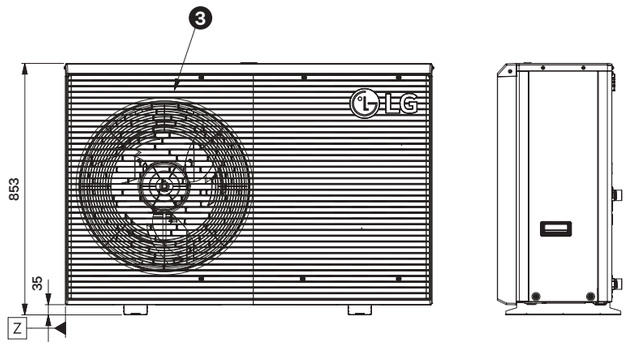

Front view

Side view

Drain holes for drain cap (7 EA)
Note.
If you need more drains, remove them

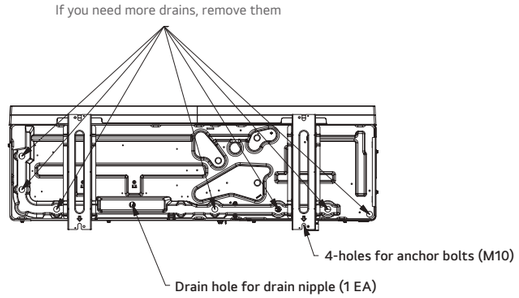

Bottom view

[Unit: mm]

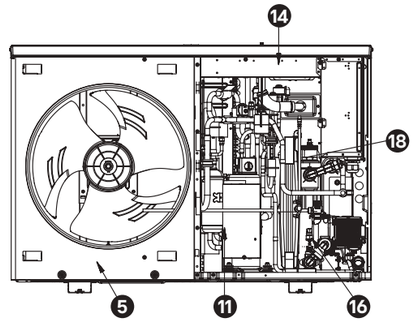

Internal front view

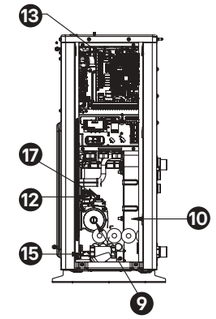

Internal side view

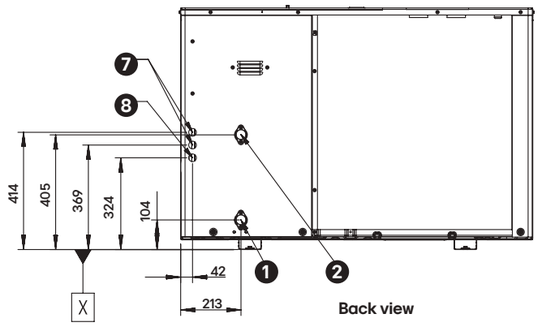

Back view

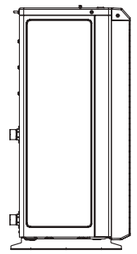

Side view

No.	Part Name	Description
1	Entering water pipe	Male PT 1" according to ISO 7-1 (Tapered pipe threads)
2	Leaving water pipe	Male PT 1" according to ISO 7-1 (Tapered pipe threads)
3	Air discharge grille	-
4	Top cover	-
5	Front panel	-
6	Side panel	-
7	Low voltage	Conduit for communication hole
8	Unit power	Conduit for power cable
9	Water pump	To circulate water inside the system
10	Plate heat exchanger	Heat exchanger between refrigerant and water
11	Compressor	R290 rotary compressor
12	Safety relief valve	Open at water pressure 3 bar
13	Indoor control box	Hydro, cycle PCB and terminal blocks
14	Outdoor control box	Inverter PCB and terminal blocks
15	Flow sensor	To measure the Water Flow Rate (5 - 80 LPM)
16	Water pressure sensor	To measure the Water Pressure (0 - 2 MPa)
17	Automatic air vents	-
18	Deaerator	Automatic gas separator

THERMA V
R290 MONOBLOC S (12 / 14 / 16 kW)

Outdoor Unit

HM121HFS UB41 / HM123HFS UB41
HM141HFS UB41 / HM143HFS UB41
HM161HFS UB41 / HM163HFS UB41



011-1W127

R290 Natural refrigerant with GWP 0.02 | A+++ 35℃ | A++ 55℃ | 75℃ | -25℃ | ThinQ

Key Components

Outdoor Unit

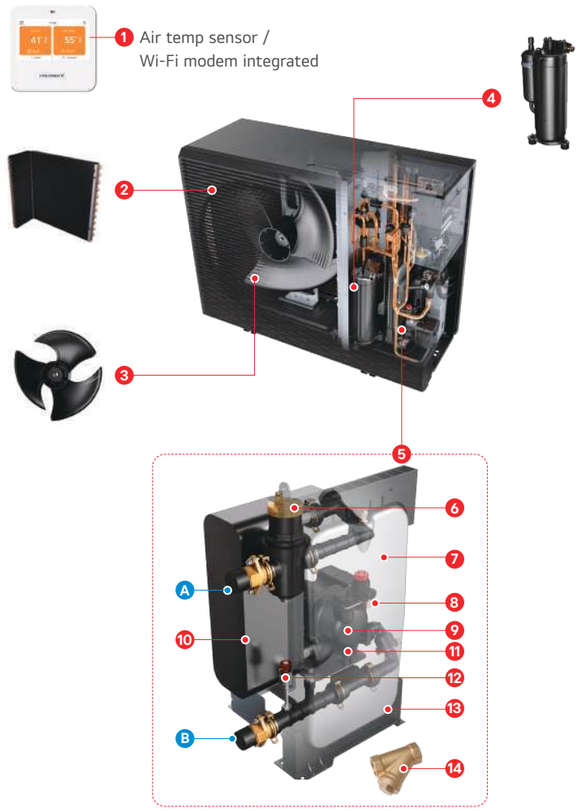

Components

1. Deluxe remote controller[1) 2)]
2. Black Fin heat exchanger (air / ref.)
3. Biomimetic fan
4. Twin rotary compressor
5. Hydronic components assembly
6. Deaerator
7. Expansion tank (8 ℓ)
8. Safety valve
9. Air vent valve
10. Plate heat exchanger
11. Water pump
12. Pressure sensor
13. Flow sensor
14. Strainer (loose supplied)

1) The remote controller is supplied with the product, but it needs to be installed separately.
2) Temperature control class (ErP class): V
* Picture shows the 12, 14, and 16 kW models. (UN36B)

Connections

A. Leaving water pipe (male PT 1")
B. Entering water pipe (male PT 1")

Product Specification (Preliminary)

Efficiency Data		Unit	12 kW (1 Ø) 12 kW (3 Ø)	14 kW (1 Ø) 14 kW (3 Ø)	16 kW (1 Ø) 16 kW (3 Ø)
Seasonal space heating eff. class (35°C / 55°C)		-	A+++ / A++	A+++ / A++	A+++ / A++
Seasonal space heating efficiency (η_s) (35°C / 55°C)		%	187 / 143	191 / 143	189 / 141
SCOP (35°C / 55°C)		-	4.75 / 3.65	4.85 / 3.65	4.80 / 3.60
Sound power level	Rated / low noise mode	dB(A)	56 / 55	57 / 56	59 / 57
Sound pressure level at 5 m	Rated / low noise mode	dB(A)	34	35	37
Nominal Capacity and COP/EER					
Air +7°C / water +35°C	Heating capacity / COP	kW / -	12.00 / 4.60	14.00 / 4.50	16.00 / 4.40
Air +2°C / water +35°C	Heating capacity / COP	kW / -	12.00 / 3.10	12.50 / 3.05	13.00 / 3.00
Air -7°C / water +35°C	Heating capacity / COP	kW / -	12.00 / 2.50	12.50 / 2.50	13.50 / 2.50
Air +7°C / water +55°C	Heating capacity / COP	kW / -	12.00 / 2.95	13.00 / 2.90	14.00 / 2.80
Air -7°C / water +55°C	Heating capacity / COP	kW / -	10.00 / 1.90	11.00 / 1.85	12.00 / 1.80
Air +35°C / water +18°C	Cooling capacity / EER	kW / -	12.00 / 4.70	12.50 / 4.60	13.00 / 4.50
Air +35°C / water +7°C	Cooling capacity / EER	kW / -	10.05 / 3.20	11.00 / 3.15	11.50 / 3.10
Outdoor Units		**Unit**	**HM121HFS UB41 HM123HFS UB41**	**HM141HFS UB41 HM143HFS UB41**	**HM161HFS UB41 HM163HFS UB41**
Operation range (outdoor air temperature)	Heating & DHW (Min. ~ Max.)	°C	-25 ~ 35		
	Cooling (Min. ~ Max.)	°C	5 ~ 48		
Operation range (leaving water temperature)	Heating (Min. ~ Max.)	°C	15 ~ 75		
	Cooling (Min. ~ Max.)	°C	5 ~ 27		
	DHW (Min. ~ Max.)	°C	15 ~ 80		
Refrigerant	Type	-	R290		
	GWP	-	0.02		
	Precharged amount	g	1,000		
Piping connections (water)	Inlet / outlet diameter	inch	Male PT 1" according to ISO 7-1 (tapered pipe threads)		
Expansion vessel (heating circuit)	Volume	ℓ	8		
Dimension	H x W x D	mm	1,019 x 1,320 x 520		
Weight	Net	kg	131.0		
Exterior	Color of chassis / RAL code	-	Black STS silver solid / RAL 8019		
	Color of front grille / RAL code	-	Light graphite / RAL 8022		
Power supply	Voltage, phase, frequency	V, Ø, Hz	220 ~ 240, 1, 50 / 380 ~ 415, 3, 50		
	Standby power consumption	W	10		
	Recommended circuit breaker	A	1 Ø: 32 / 3 Ø: 16		

Note
1. Due to our policy of innovation, some specifications may be changed without notification.
2. Wiring cable size must comply with the applicable local and national codes. Especially the power cable and circuit breaker should be selected in accordance with that.
3. Sound power level is measured on the rated condition in accordance with ISO 9614 standard. Sound pressure level is not a value declared on Eurovent Program and is converted from sound power level based on a tonality penalty of 0 dB and installation in free-field. The directivity index (Q) is assumed as 2. Therefore, these values can be increased owing to ambient conditions during operation. Rated sound power level is in accordance with EN12102-1 under condition of EN14825.
4. Performances are in accordance with EN14511 and reflect ErP testing conditions. Above gives the declared values at rated conditions according to ErP regulation.
5. This product contains fluorinated greenhouse gases.
6. All installation sites must be equipped with an earth leakage circuit breaker (ELCB).
7. DHW 65 ~ 80°C operating is available only when the booster heater is operating.

THERMA V
R290 MONOBLOC S (12 / 14 / 16 kW)

Performance Table for Heating Operation

Maximum heating capacity (including defrost effect)

HM121HFS UB41 / HM123HFS UB41

Outdoor Temp. [°C DB]	LWT 30°C	LWT 35°C	LWT 40°C	LWT 45°C	LWT 50°C	LWT 55°C	LWT 60°C	LWT 65°C	LWT 70°C	LWT 75°C
	Capacity (kW)									
-25	8.97	8.70	8.43	8.16	7.90	7.63	7.36	-	-	-
-20	9.85	9.53	9.18	8.82	8.45	8.07	7.68	7.29	-	-
-15	10.75	10.37	9.95	9.49	9.01	8.52	8.01	7.50	6.98	6.48
-7	12.00	12.00	11.26	10.62	10.13	10.00	8.56	7.87	7.17	6.46
-4	12.00	12.00	11.81	11.07	10.50	10.30	8.77	8.01	7.24	6.45
-2	12.00	12.00	12.00	11.37	10.74	10.51	8.91	8.11	7.29	6.45
2	12.00	12.00	12.00	11.97	11.00	10.90	9.19	8.31	7.42	6.44
7	12.00	12.00	12.00	12.00	11.52	11.35	9.53	8.58	7.63	-
10	12.00	12.00	12.00	12.00	11.80	10.73	9.72	8.73	7.76	-
15	12.00	12.00	12.00	12.00	12.00	11.09	10.02	8.98	7.99	-
18	12.00	12.00	12.00	12.00	12.00	11.28	10.18	9.12	8.15	-
20	12.00	12.00	12.00	12.00	12.00	11.41	10.29	9.20	7.93	-
35	12.00	12.00	12.00	12.00	12.00	12.00	10.81	9.43	-	-

HM141HFS UB41 / HM143HFS UB41

Outdoor Temp. [°C DB]	LWT 30°C	LWT 35°C	LWT 40°C	LWT 45°C	LWT 50°C	LWT 55°C	LWT 60°C	LWT 65°C	LWT 70°C	LWT 75°C
	Capacity (kW)									
-25	9.40	9.15	8.90	8.65	8.40	8.15	7.90	-	-	-
-20	10.27	9.94	9.60	9.26	8.92	8.57	8.23	7.90	-	-
-15	11.14	10.74	10.32	9.88	9.44	8.99	8.54	8.09	7.66	7.29
-7	12.56	12.50	11.92	11.31	11.15	11.00	9.02	8.39	7.74	7.09
-4	13.11	13.04	12.40	11.70	11.42	11.13	9.21	8.50	7.77	7.02
-2	13.49	13.40	12.72	11.97	11.62	11.26	9.33	8.58	7.79	6.97
2	14.00	13.68	12.89	12.04	11.70	11.35	9.58	8.75	7.87	6.87
7	14.00	14.00	13.66	12.66	12.07	11.48	9.91	9.00	8.06	-
10	14.00	14.00	14.00	13.00	12.26	11.52	10.12	9.17	8.21	-
15	14.00	14.00	14.00	13.53	12.60	11.66	10.45	9.45	8.47	-
18	14.00	14.00	14.00	13.84	12.76	11.70	10.65	9.62	8.66	-
20	14.00	14.00	14.00	14.00	12.94	11.85	10.78	9.72	8.48	-
35	14.00	14.00	14.00	14.00	14.00	12.89	11.53	10.17	-	-

HM161HFS UB41 / HM163HFS UB41

Outdoor Temp. [°C DB]	LWT 30°C	LWT 35°C	LWT 40°C	LWT 45°C	LWT 50°C	LWT 55°C	LWT 60°C	LWT 65°C	LWT 70°C	LWT 75°C
	Capacity (kW)									
-25	9.82	9.59	9.36	9.13	8.90	8.67	8.44	-	-	-
-20	10.83	10.52	10.20	9.86	9.51	9.17	8.84	8.55	-	-
-15	11.84	11.45	11.03	10.58	10.12	9.65	9.20	8.76	8.37	8.10
-7	14.02	13.50	12.90	12.22	12.11	12.00	9.71	9.04	8.38	7.72
-4	14.67	14.12	13.44	12.68	12.37	12.07	9.90	9.14	8.37	7.58
-2	15.10	14.56	13.82	12.97	12.54	12.12	10.01	9.20	8.36	7.48
2	15.39	14.94	14.03	13.56	12.87	12.19	10.25	9.33	8.37	7.29
7	16.00	16.00	14.89	13.66	12.99	12.31	10.53	9.52	8.49	-
10	16.00	16.00	15.20	13.97	13.20	12.43	10.69	9.64	8.58	-
15	16.00	16.00	15.57	14.00	13.23	12.78	10.95	9.84	8.76	-
18	16.00	16.00	15.81	14.64	13.44	12.97	11.10	9.95	8.90	-
20	16.00	16.00	16.00	14.79	13.58	13.09	11.18	10.02	8.65	-
35	16.00	16.00	16.00	16.00	14.51	13.81	11.60	10.21	-	-

Note
1. DB: Dry Bulb Temperature (°C), LWT: Leaving Water Temperature (°C),
   LPM: Liters Per Minute (ℓ/min), TC: Total Capacity (kW)
2. Direct interpolation is permissible. Do not extrapolate.
3. Measuring procedure follows EN-14511.
   • Rated values are based on standard conditions and it can be found on specifications.
   • Above table values may not be matched according to installation condition. Except for rated value, the performance is not guaranteed.
   • In accordance with the test standard (or nations), the rating will vary slightly.
4. The shaded areas are not guaranteed continuous operation.

Performance Table for Cooling Operation

Maximum cooling capacity

HM121HFS UB41 / HM123HFS UB41

Outdoor Temp. [°C DB]	LWT 7°C	LWT 10°C	LWT 13°C	LWT 15°C	LWT 18°C	LWT 20°C	LWT 22°C
	Capacity (kW)						
20	12.00	12.00	12.00	12.00	12.00	12.00	12.00
30	10.06	10.79	11.53	12.00	12.00	12.00	12.00
35	9.01	9.65	10.36	10.96	12.00	12.00	12.00
40	7.95	8.37	8.79	9.07	9.37	9.43	9.42
45	6.89	7.04	7.19	7.29	7.43	7.53	7.63

HM141HFS UB41 / HM143HFS UB41

Outdoor Temp. [°C DB]	LWT 7°C	LWT 10°C	LWT 13°C	LWT 15°C	LWT 18°C	LWT 20°C	LWT 22°C
	Capacity (kW)						
20	12.84	14.00	14.00	14.00	14.00	14.00	14.00
30	10.61	11.50	12.39	12.98	13.76	14.00	14.00
35	9.50	10.28	11.10	11.75	13.75	12.78	12.60
40	8.39	8.95	9.51	9.88	10.35	10.55	10.70
45	7.28	7.58	7.89	8.09	8.39	8.60	8.80

HM161HFS UB41 / HM163HFS UB41

Outdoor Temp. [°C DB]	LWT 7°C	LWT 10°C	LWT 13°C	LWT 15°C	LWT 18°C	LWT 20°C	LWT 22°C
	Capacity (kW)						
20	13.50	14.82	16.00	16.00	16.00	16.00	16.00
30	11.16	12.20	13.24	13.93	14.91	15.49	16.00
35	9.99	10.89	11.83	12.53	14.30	13.88	14.01
40	8.83	9.52	10.21	10.68	11.32	11.68	11.99
45	7.66	8.12	8.58	8.89	9.36	9.67	9.98

Note
1. DB: Dry Bulb Temperature (°C), LWT: Leaving Water Temperature (°C),
   LPM: Liters Per Minute (ℓ/min), TC: Total Capacity (kW)
2. Direct interpolation is permissible. Do not extrapolate.
3. Measuring procedure follows EN-14511.
   • Rated values are based on standard conditions and it can be found on specifications.
   • Above table values may not be matched according to installation condition. Except for rated value, the performance is not guaranteed.
   • In accordance with the test standard (or nations), the rating will vary slightly.
4. The shaded areas are not guaranteed continuous operation.

Supplied Parts

Strainer



Technical Specification		Unit	Details
Material	Body	-	Brass
	Mesh	-	Stainless steel (STS304)
Mesh	Mesh no.	-	30
	Max. particle size	mm	0.6
Piping connection		-	Female G1" according to ISO 228-1

* The strainer and valves are supplied with the product, but it need to be installed separately.
* This strainer should be installed at the inlet connection of the outdoor unit to protect the clogging of a plate heat exchanger.

THERMA V
R290 MONOBLOC S (12 / 14 / 16 kW)

Drawings

[Unit: mm]

HM121HFS UB41 / HM123HFS UB41
HM141HFS UB41 / HM143HFS UB41
HM161HFS UB41 / HM163HFS UB41

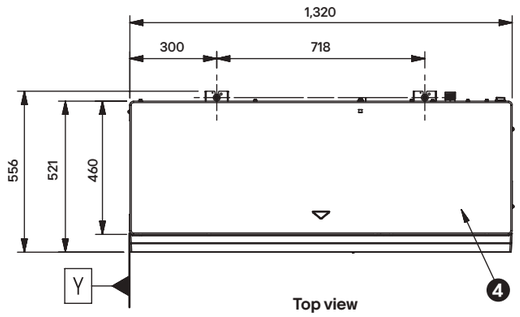

Top view

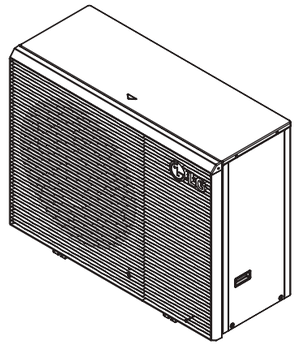

3D view

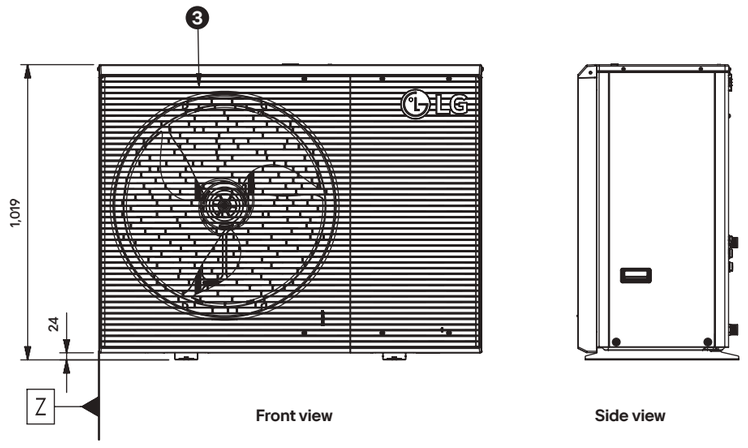

Front view

Side view

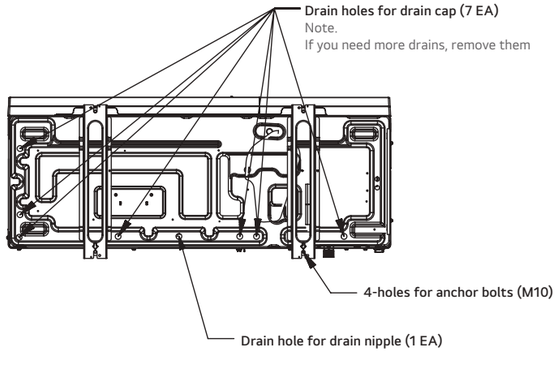

Bottom view

[Unit: mm]

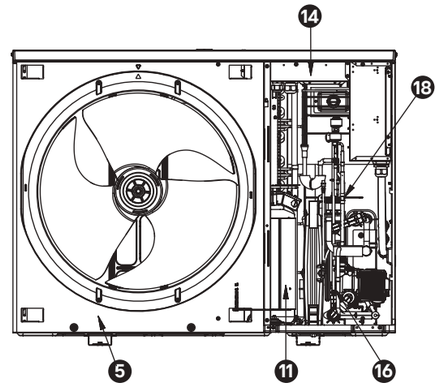

Internal front view

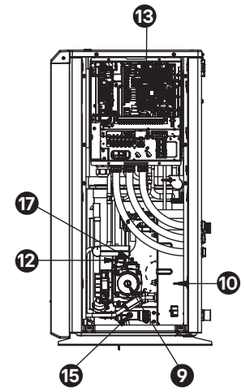

Internal side view

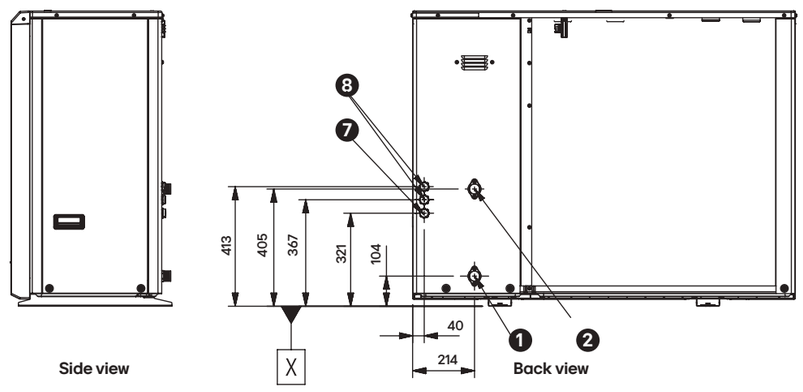

Side view

Back view

Side view

No.	Part Name	Description
1	Entering water pipe	Male PT 1" according to ISO 7-1 (Tapered pipe threads)
2	Leaving water pipe	Male PT 1" according to ISO 7-1 (Tapered pipe threads)
3	Air discharge grille	-
4	Top cover	-
5	Front panel	-
6	Side panel	-
7	Low voltage	Conduit for communication hole
8	Unit power	Conduit for power cable
9	Water pump	To circulate water inside the system
10	Plate heat exchanger	Heat exchanger between refrigerant and water
11	Compressor	R290 rotary compressor
12	Safety relief valve	Open at water pressure 3 bar
13	Indoor control box	Hydro, cycle PCB and terminal blocks
14	Outdoor control box	Inverter PCB
15	Flow sensor	To measure the Water Flow Rate (5 - 80 LPM)
16	Water pressure sensor	To measure the Water Pressure (0 - 2 MPa)
17	Automatic air vents	-
18	Deaerator	Automatic gas separator

THERMA V R290 MONOBLOC S ACCESSORIES

Electric Backup Heater

HA031M E2
HA061M E2
HA063M E2



Drawings

[Unit: mm]

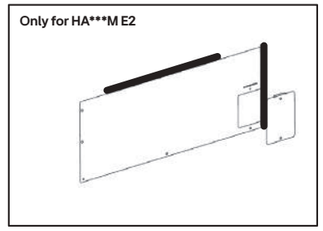

Right side panel detail



Top view

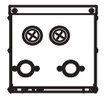

Bottom view

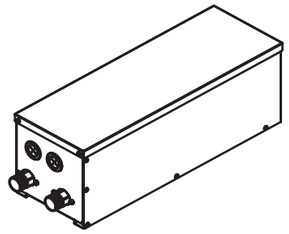

3D view

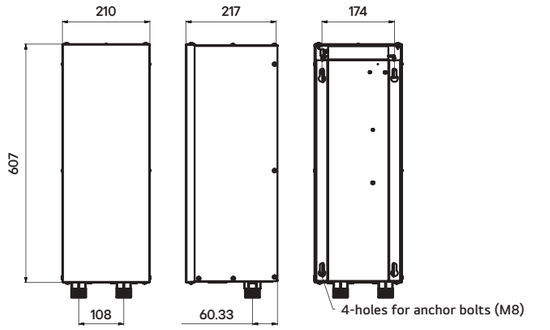

Front view | Right side view | Back view

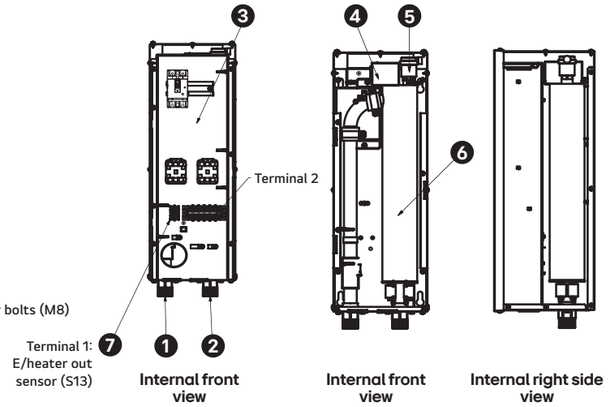

Internal front view | Internal front view | Internal right side view

Backup Heater Specification

Electrical Specification		Unit	HA031M E2	HA061M E2	HA063M E2
Backup heater	Type	-	Sheath		
	Number of heating coil	EA	1	2	3
	Capacity combination	kW	3.0	3.0 + 3.0	2.0 + 2.0 + 2.0
	Heating steps	Step	1	2	1
	Power supply	V, Ø, Hz	220 ~ 240, 1, 50		380 ~ 415, 3, 50
	Rated running current	A	12.5	25.0	8.7
	Dimensions (H x W x D)	mm	607 x 210 x 217		
	Net weight (unit)	kg	12.8	13.4	13.1
Wiring connections	Power supply cable (included earth, H07RN-F)	mm^2 x cores	1.5 x 3 C	4.0 x 3 C	2.5 x 4 C
	Communication cable (H07RN-F)	mm^2 x cores	0.75 x 4 C		0.75 x 2 C

Note
1. Due to our policy of innovation, some specifications may be changed without notification.
2. Wiring cable size must comply with the applicable local and national codes.
   Especially the power cable and circuit breaker should be selected in accordance with that.

No.	Part Name	Description
1	Leaving water pipe	Male PT 1 inch
2	Entering water pipe	Male PT 1 inch
3	Control box	Circuit breaker, Magnetic switch, Terminal blocks
4	Thermal switch	Cut-off power input to E/Heater at 90°C
5	Air vent	Air purging when charging water
6	Electric heater	Refer to the related information
7	Backup heater outlet sensor	Connect to unit (heat pump)

THERMA V R290 MONOBLOC S WITH LG WATER TANK

Why LG Hot Water Solutions?

At LG, we strive to deliver perfect comfort through solutions designed for safer, more convenient, and energy-efficient everyday living. Seamlessly integrated with LG THERMA V, our premium hot water solutions combine a modern design with easy installation, while durable stainless steel construction inspired by Nordic craftsmanship ensures lasting comfort and reliability. Experience perfect comfort with LG.



Performance & Comfort

Reliable Heating, More Hot Water, Less Energy

- Smarter storage for more hot water
- Advanced insulation for enhanced comfort
- Large coils for efficient heating performance
- Solar-ready design for better energy efficiency



Hygiene

High-quality Stainless Steel for Clean Water

- Corrosion-resistant design for cleaner water
- Designed for hard water conditions
- Smart heating for lower legionella risk
- Helping protect against limescale

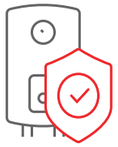

Durability & Reliability

Norwegian Quality, Built to Last

- High-quality stainless-steel tanks
- Integrated thermostat for enhanced safety
- Blended for comfortable water temperatures
- Premium design for modern homes



Flexibility & Convenience

Modern Solutions for Easy Installation and Maintenance

- Modern design that fits any space
- Lightweight design for easier installation
- Simplified installation, just plug and go
- Engineered for low-maintenance operation

Product Range

Line-up	Capacity (ℓ) and Model Name				
	60	100	200	250	300
Domestic Hot Water Tank Single coil	-	-	SD020SASN0	SD025SASN0	SD030SASN0
Domestic Hot Water Tank Dual coil	-	-	-	-	SD030SSSN0
Domestic Hot Water Tank with Buffer	-	-	-	-	ST030SASN0
Buffer Tank	SB006SAAN0	SB010SAAN0	-	-	-

Compatibility Table

Domestic Hot Water Tank

Model name		SD020SASN0	SD025SASN0	SD030SASN0	SD030SSSN0		ST030SASN0
Capacity (ℓ)		200	250	300	300		223/62
Coil surface (m²)		2.6	2.6	3.1	1.4 (Lower)	0.8 (Upper)	2.8
Heat Pump Capacity (kW)	5 kW	●	▲	▲	●	▲	●
	7 kW	●	▲	▲	●	×	●
	9 kW	●	▲	▲	×	×	●
	12 kW	▲	●	●	×	×	▲
	14 kW	▲	●	●	×	×	×
	16 kW	×	×	●	×	×	×

●: Recommended / ▲: Compatible / ×: Not Recommended

Buffer Tank

Model name		SB006SAAN0	SB010SAAN0
Capacity (ℓ)		60	100
Heat Pump Capacity (kW)	5 kW	●	▲
	7 kW	●	▲
	9 kW	●	▲
	12 kW	▲	●
	14 kW	▲	●
	16 kW	▲	●

●: Recommended / ▲: Compatible / ×: Not Recommended

EN16147 Combination Efficiency

Type of Combination	Heat Pump	DHW Tank	Profile	Climate	Efficiency Class	Water Heating Efficiency (%)	COP DHW	Method
R290 Monobloc S (5 / 7 / 9 kW, 1 / 3 Phase) w/ LG Water Tanks	HM051HFS UA41	SD020SASN0 (200 ℓ)	ℓ	Colder	A	106	2.50	Based on Test (EN16147: 2017 + A1: 2022)
				Average	A+	135	3.20	
				Warmer	A++	150	3.60	
	HM071HFS UA41 / HM073HFS UA41		ℓ	Colder	A	106	2.50	
				Average	A+	135	3.20	
				Warmer	A++	150	3.60	
	HM091HFS UA41 / HM093HFS UA41		ℓ	Colder	A	106	2.50	
				Average	A+	135	3.20	
				Warmer	A++	150	3.60	

THERMA V R290 MONOBLOC S WITH LG WATER TANK

Package for Heating Only

Outdoor Unit

HM051HFS UA41
HM071HFS UA41 / HM073HFS UA41
HM091HFS UA41 / HM093HFS UA41

Buffer Tank

SB006SAAN0 (60 ℓ)
SB010SAAN0 (100 ℓ)



Proposed Package

Capacity	THERMA V	Buffer Tanks
5 kW	HM051HFS UA41	SB006SAAN0 (60 ℓ)
7 kW	HM071HFS UA41 / HM073HFS UA41	
9 kW	HM091HFS UA41 / HM093HFS UA41	
12 kW	HM121HFS UB41 / HM123HFS UB41	SB010SAAN0 (100 ℓ)
14 kW	HM141HFS UB41 / HM143HFS UB41	
16 kW	HM161HFS UB41 / HM163HFS UB41	

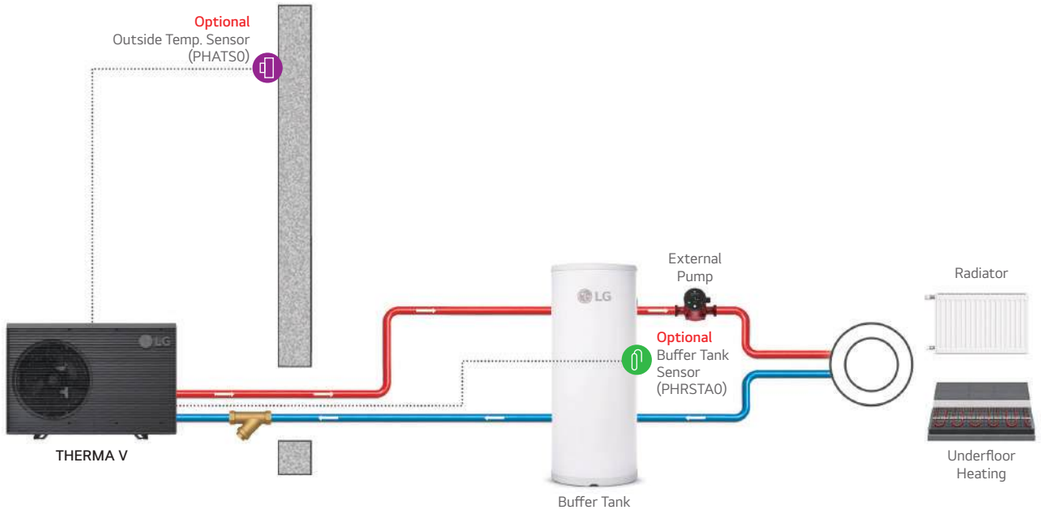

Package for Heating and Domestic Hot Water

Outdoor Unit

HM051HFS UA41
HM071HFS UA41 / HM073HFS UA41
HM091HFS UA41 / HM093HFS UA41
HM121HFS UB41 / HM123HFS UB41
HM141HFS UB41 / HM143HFS UB41
HM161HFS UB41 / HM163HFS UB41

Buffer Tank

SB006SAAN0 (60 ℓ)
SB010SAAN0 (100 ℓ)

Domestic Hot Water Tank

SD020SASN0 (200 ℓ)
SD030SASN0 (300 ℓ)



Proposed Package

Capacity	Therma V	Buffer Tanks	Domestic Hot Water Tank
5 kW	HM051HFS UA41	SB006SAAN0 (60 ℓ)	SD020SASN0 (200 ℓ)
7 kW	HM071HFS UA41 / HM073HFS UA41		
9 kW	HM091HFS UA41 / HM093HFS UA41		
12 kW	HM121HFS UB41 / HM123HFS UB41	SB010SAAN0 (100 ℓ)	SD030SASN0 (300 ℓ)
14 kW	HM141HFS UB41 / HM143HFS UB41		
16 kW	HM161HFS UB41 / HM163HFS UB41		

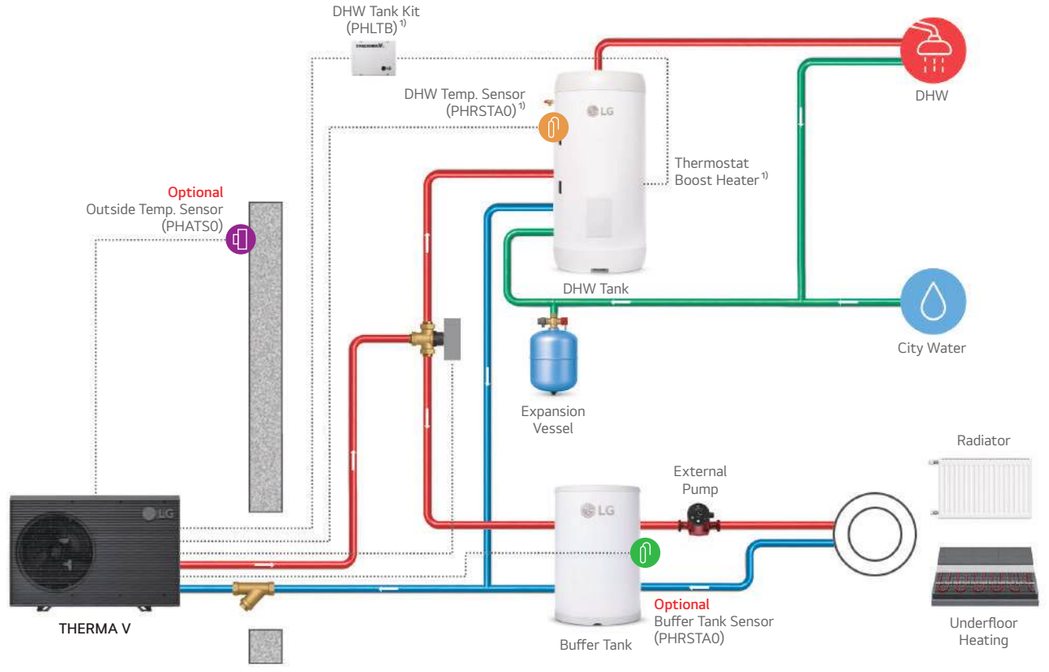

1) If DHW Booster Heater is controlled from THERMA V, magnetic contactor (3rd party) or DHW Tank Kit (PHLTB) should be installed.
In case of DHW Tank Kit (PHLTB), a DHW Temp. Sensor (PHRSTA0) is also included.